VOICE CONTROLLED HOME AUTOMATION

submitted by

1. P. Naveen Kumar (N200410)
2. K. Santhosh Kumar (N200922)
3. N. Elisha Raj (N200905)

Project report submitted in partial fulfillment of the requirements for the award of the degree of

B. Tech in Electronics and Communication Engineering

Under the supervision of

Dr. Shaik Riyaz Hussain

DEPARTMENT OF ELECTRONICS AND COMMUNICATION ENGINEERING

RAJIV GANDHI UNIVERSITY OF KNOWLEDGE TECHNOLOGIESNUZVID CAMPUS

ANDHRA PRADESH – 521202

December, 2024

Declaration

We declare that this written submission represents our ideas in our own words and where others ideas or words have been included, we have adequately cited and referenced the original sources. We also declare that we have adhered to all principles of academic honesty and integrity and have not misrepresented or fabricated or falsified any idea/data/fact/source in our subission. We under- stand that any violation of the above will be cause for disciplinary action by the Institute and can also evoke penal action from the sources which have thus not been properly cited or from whom proper permission has not been taken when needed.

P. Naveen Kumar (N200410)

K. Santhosh Kumar (N200922)

N. Elisha Raj (N200905)

Dr. Sk Riyaz Hussain
Assistant Professor
Dept. of ECE
RGUKT Nuzvid Campus.
Nuzvid - 521202.

Head of the Department
Department of ECE
RGUKT Nuzvid Campus.
Nuzvid - 521202.

Date: 03, December 2024

Abstract

Home automation is gaining popularity nowadays. A smart home automation system is based on ensuring security and making user life easier. It contains a large number of sensors which can control or monitor objects distributed in three-dimensional space. The sensors can be specialized in measuring temperature, humidity, pressure, light, noise, dust air, and so on.

The Internet of Things (IoT) connects users with interconnection of things to facilitate the life. IoT is now shifted towards 'Thing to Thing'. Smart home concept brings comfort and convenience in our lives with the aid of IoT. Major issues in current smart home scenario are automation and security. Problem in security arises due to network of devices in the home with internet. Focus is sifted towards providing confidentiality, authenticity, and integrity of data sensed and exchanged by smart home objects. Computation overhead is also a concern for smart home solutions. Comfort and user requirements as per scenario or situation are basic need for automation. Automation with learning human behavior is also a major concern with smart home concept. Paper represents IoT based smart home automation approach which is secure and also reduces computation overhead.

This project is about finding a solution mainly for the elderly people and physically challenged people to make more convenient and more reliable in operating the home appliances. Mobile communication technology is playing a major role of automation. This project is basically on reliable home control for switching ON and OFF the appliances remotely using Smart phone application. While using this technology the system improves the living standard at home, reduces human effort, energy efficient and ease of access and thus make a smart home. The proposed system consists of Bluetooth module, Node MCU, 2channel relay module. This module controls the home appliances with a very ease of installation and it is user friendly.

Contents

Abstract **3**

Chapter 1 ..... **7**

1.1 INTRODUCTION 7

1.2 Home Automation 8

Chapter 2 ..... **10**

2.1 Project Description 10

2.1.1 Basic Idea of the project 10

2.1.2 Cloud 10

2.1.3 Block Diagram 11

Chapter 3 ..... **12**

3.1 Hardware Components 12

3.1.1 ARDUINO 12

3.1.2 NODE MCU 13

3.1.3 RELAY MODULE 14

3.1.4 BLUETOOTH MODULE 15

3.1.5 RASPBERRY PI 4 16

3.1.6 JUMPER WIRES 17

3.1.7 BREAD BOARD 18

Chapter 4 ..... **19**

4.1 Modes of Operation 19

4.1.1 ZIGBEE 19

4.1.2 WI-FI 19

4.1.3 BLUETOOTH 20

4.2 Voice Assistants 21

4.2.1 Google Assistant 21

4.2.2 Alexa & Amazon 21

4.2.3 SIRI by Apple 22

4.2.4 Samsung Smart Things – Samsung Bixby 22

4.3 Connecting Software that can be used: 23

4.3.1 IFTTT 23

4.3.2 BLYNK 23

4.3.3 GOOGLE HOME 24

4.3.4 Arduino Bluetooth Controller App 24

Chapter 5 25

5.1 Implementation of the project 25

5.1.1 Introduction 25

5.1.2 Description 26

5.1.3 Methodology & Implemented diagram 26

Future Scope 31

Conclusion 32

References 33

Acknowledgements 34

LIST OF FIGURES

Figure 1: Block Diagram 11
Figure 2: Arduino UNO Board 12
Figure 3: NODE MCU Pin Diagram 14
Figure 4: 4-Channel Relay Module 14
Figure 5: Bluetooth Module HC-05 15
Figure 6: Raspberry Pi 4 Model 16
Figure 7: Jumper Wires and Types 17
Figure 8: Bread Board 18
Figure 9: Zigbee Logo 19
Figure 10: Zigbee Network 19
Figure 11: Wi-Fi 19
Figure 12: Wi-Fi Communication 20
Figure 13: Bluetooth logo 20
Figure 14: Google Assistant 21
Figure 15: Alexa by Amazon 21
Figure 16: Siri by Apple 22
Figure 17: Bixby by Samsung 22
Figure 18: IFTTT 23
Figure 19: Blynk Logo 23
Figure 20: Blynk Web interface 23
Figure 21: Blynk Mobile Interface 23
Figure 22: Google Home 24
Figure 23: Arduino Controller 24
Figure 24: Complete Diagram of the Project 25
Figure 25: Practical Setup made by us 26

Chapter 1

1.1 INTRODUCTION

In our Current era, Home automation is become more beneficial because of its safety and security. Nowadays, home automation became more advance and precise to operate all the home appliances. Home automation system become energy efficient and highly approachable smart home technique. It involves basic features to maintain the user satisfaction and comfort. This proposed system is a precise combination of Android smart phone and embedded system which include Node MCU, Wi-Fi module, Bluetooth module and Relay circuit. In this paper, we used a wireless technology to operate the device. An android application is installed in a mobile device i.e. android smart phone and it has inbuilt switch interface of all the appliances separately in it. Through which all the respective devices can be control and monitor individually. The Wi-Fi module receives the command from mobile phone and passes to relay circuit. As per the given signal from the user, the relay circuit switched ON/OFF the respective devices. The main purpose of using Wi-Fi wireless technology is to provide a greater extent to range and better feasibility.

To control the electronic appliances through the mobile phone and Arduino is more efficient than the using of electric switches because it makes the system cost effective and long lasting to use. An automated home can be a very simple grouping of controls, or it can be heavily automated where any appliance that is plugged into electrical power is remotely controlled. Costs mainly include equipment, components, furniture, and custom installation.

Home automation is designed to introduce convenience and efficiency to a home. People living with physical handicaps may rely on the features of a home automation system to accomplish tasks that might otherwise be difficult or impossible.

Most of the automation works using the online but, in this project, it can be used offline as well. In Bluetooth based home automation system the home appliances are connected to the Arduino BT board at input output ports using relay. The program of Arduino BT board is based on high level interactive C language of microcontrollers; the connection is made via Bluetooth. The password protection is provided so only authorized user is allowed to access the

appliances.

The Bluetooth connection is established between Arduino BT board and phone for wireless communication.

1.2 Home Automation

Automation is the process of automatically performing everyday functions around the home to save you time, energy, money and at the same time offering improved security. The automation is performed by a central controller. This can be either a standalone unit or a piece of software on a PC. Both options have their advantages.

Home automation is anything that gives you remote or automatic control of things in & around the home. The systems that you can control include: Lighting, Appliances, Heating and cooling, Security and monitoring systems, Entertainment (home audio and video), Communications (telephones and intercoms, internet), Lawn sprinklers, Curtain movements, Pool filter pump, Spa heater, Filtration unit, Gate/garage door motor, Shade motor control, Roof sprinklers, Electric strikes, Keyless entry etc.

This central controller can be accessed and controlled through interfaces like keypad, wired or wireless touch-screens (with/without video), universal remotes, mobile devices. Home automation provides a more convenient & elegant atmosphere for the family to compliment and match the lifestyle. Everyone in the family experiences the comfort of automation with added convenience through integrated control of scheduled common lifestyle 4 activities performed every day. An automated home can provide security, temperature, lighting, and audio control for comfort, convenience, and safety. It creates reliable and coordinated controls to operate home devices automatically for simplifying operations.

Home automation saves your time and effort by controlling you home automatically for performing routine functions such as watering your grass, or turning off all lights, setting the thermostat to economy mode, control scheduled appliances operation and arming the security system when you retire for the night.

Home automation provides you with the comfort of whole home audio/video integration so that any source could be placed anywhere in a home and still be enjoyed everywhere in a home. Home automation provides you pro-active home security so that you can look in on your home remotely from anywhere in the world, or that your home will phone you if it finds anything suspicious, or that a fire will alert your home to wake you, shut down the gas and ventilation system, turn on a lighting path for your escape, and automatically phone the fire/police department. In other words it integrates your alarm system with other home systems for a response to intrusion that meets your needs of enhanced Safety.

The term 'home automation' is now acknowledged as covering most I.T., automation, communication and wiring aspects of our homes. Most of these functions can be installed independently of each other, but the real benefits of the automated home are realized when these different aspects communicate with each other. For example, having two PC's networked together in the home, giving both users access to the internet may seem like the forefront of technology, but imagine if they were tied into our house wiring and could turn lights and appliances on and off automatically when we are away from home, 5 even via the internet. Imagine that the PC was networked into our security system and could display images from our home security cameras onto our computer screen at work. Imagine that your security system was tied into your telephone and could ring your mobile in the event of a burglary, you could even talk to visitors to your door from anywhere in the world.

Chapter 2

2.1 Project Description

2.1.1 Basic Idea of the project

Basic idea of Smart Home automation using Cloud services is controlling the home appliances remotely over the internet. Homes of the 21st century will become more and more self-controlled and automated due to the comfort it provides, especially when employed in a private home. A home automation system is a means that allow users to control electric appliances of varying kind.

Many existing, well-established home automation systems are based on wired communication. This does not pose a problem until the system is planned well in advance and installed during the physical construction of the building. But for already existing buildings the implementation cost goes very high. In contrast, Wireless systems can be of great help for automation systems. With the advancement of wireless technologies such as Wi-Fi, cloud networks in the recent past, wireless systems are used every day and everywhere. We will present a Smart Home System (SHS) using ARDUINO UNO ATMEGA328 that employs the integration of cloud networking, wireless communication, energy monitoring, or weather stations, capturing the photo of a person moving around the house and storing it onto the cloud. SHS is to provide the user with remote control of various lights, fans, and appliances 8 within their home and storing the data in the cloud. The system will automatically change on the basis of sensors' data. This system is designed to be low cost and expandable allowing a variety of devices to be controlled

2.1.2 Cloud

Home automation systems face four main challenges, these are high cost of ownership, inflexibility, poor manageability, and difficulty in achieving security. The main objectives of this research is to design and implement a home automation system using IoT that is capable of controlling and automating most of the house appliances through an easy manageable web interface. The proposed system has a great flexibility by using Wi-Fi technology to interconnect its distributed sensors to home automation server. This will decrease the deployment cost and will increase the ability of upgrading, and system reconfiguration.

2.1.3 Block Diagram

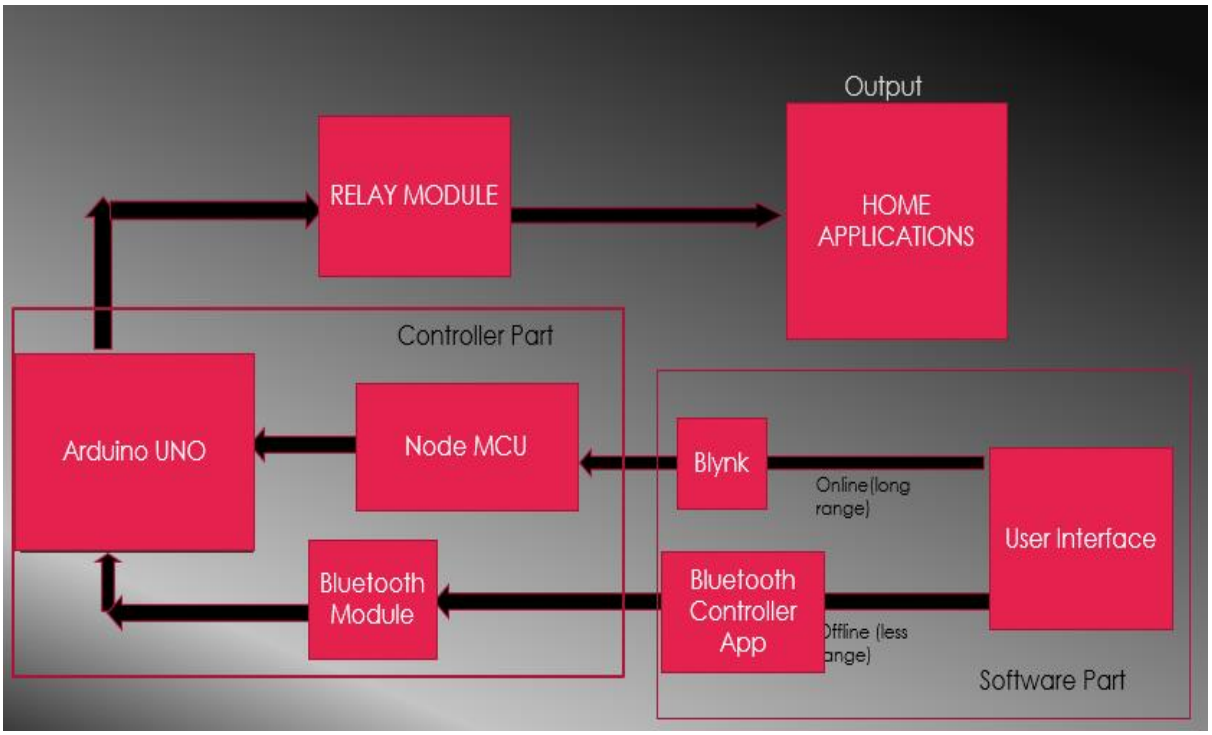

Figure 1: Block Diagram

Chapter 3

3.1 Hardware Components

3.1.1 ARDUINO

Arduino is an important device used in electronics engineering for creating mini-projects or for integrating large projects. Arduino itself consists of various components that can be programmed according to the project requirements using some assembly languages like C/C++. Arduino is the first choice of many professionals due to the ease with which it can be programmed and how it allows interactive features for user experience. Arduino is programmed to include both hardware and software components which account for its use in different fields like designing, sensing, and testing. Since Arduino is an open-source platform, it is used globally by users all across the globe.

Figure 2: Arduino UNO Board

The Arduino is one of the most popular and widely used Arduino boards. It's based on the ATmega328P microcontroller and offers a good balance of features, performance, and affordability, making it suitable for a wide range of projects, from simple to moderately complex.

Most electronic devices involve circuit-making using hardware components. The purpose of introducing Arduino was to make an easy-to-use device that can offer the feature of programming along with circuit making. Therefore, Arduino is a programmable device that is used mostly by artists, designers, engineers, hobbyists, and anyone who wants to explore programming in electronics.

The Arduino uses its components to gather information from the surroundings and generate a precise output accordingly. The information is gathered using some components like sensors, and input pins, and an output is generated depending on the programming done. This output can range from illuminating an LED to turning the motors on.

Arduinos are great devices that can be used for creating interactive projects. They can either be used alone to create basic projects or they can be integrated with Arduino, Raspberry Pi’s, Node MCU, or nearly anything else using some programming in their software to create

some advanced level of projects. It is good to know the specifications of different Arduino so that you can select the right Arduino for your project.

Hardware components of Arduino

- Microcontroller: The Microcontroller controls the execution of all the programs and codes uploaded on Arduino. The microcontroller is equipped with components that can perform different functions.
- USB port: This port is used to establish a connection between the computer and the Arduino board.
- USB to Serial chip: The USB to Serial port is used for adding data from the computer to the microcontroller. This is how the code is uploaded from the computer to the Arduino board.
- Digital pins: These pins are used for turning the LEDs on and off by using digital logic ('0' and '1').
- Analog pins: These pins are used for taking analog input.
- 5V / 3.3V pins: These pins are used for supplying power to devices.
- GND: This pin is used for setting a reference level.

3.1.2 NODE MCU

Node-MCU is an open source firmware for which open source prototyping board designs are available. The name "Node-MCU" combines "node" and "MCU" (micro-controller unit). The term "Node-MCU" strictly speaking refers to the firmware rather than the associated development kits. Both the firmware and prototyping board designs are open source.

The firmware uses the Lua scripting language. The firmware is based on the eLua project, and built on the Espressif Non-OS SDK for ESP8266. It uses many open source projects, such as lua-cjson and SPIFFS, a flash file system for embedded controllers.

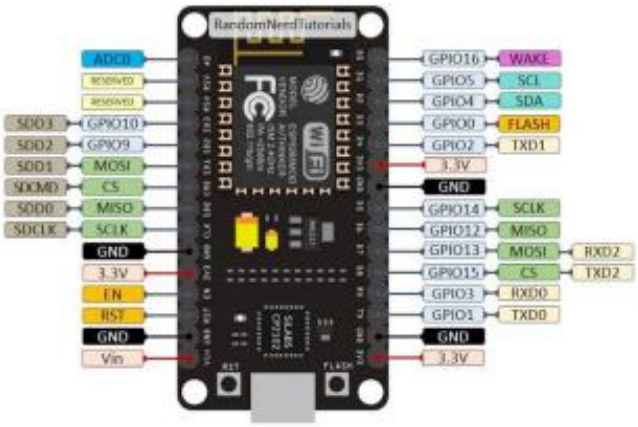

Figure 3: NODE MCU Pin Diagram

Due to resource constraints, users need to select the modules relevant for their project and build a firmware tailored to their needs. Support for the 32-bit ESP32 has also been implemented.

The prototyping hardware typically used is a circuit board functioning as a dual in-line package (DIP) which integrates a USB controller with a smaller surface-mounted board containing the MCU and antenna. The choice of the DIP format allows for easy prototyping on breadboards. The design was initially based on the ESP-12 module of the ESP8266, which is a Wi-Fi SoC integrated with a Ten silica Xtensa LX106 core, widely used in IoT applications.

3.1.3 RELAY MODULE

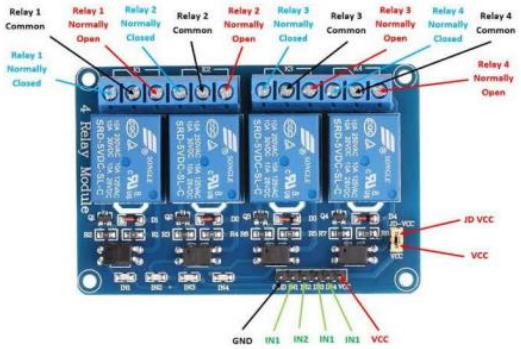

Figure 4: 4-Channel Relay Module

Relays are for the most part utilized where it is expected to direct a circuit through an individual insignificant power signal or utilized where various circuits should be managed through a solitary sign. The underlying usage of Relays was in the drawn-out length of broadcast circuits like sign repeaters as they empower the wave that is gotten and sends to different circuits. The significant execution of Relays was in phone trades and the underlying variant of PCs.

The overall sort of a relays utilizes electromagnet to perform opening and shutting of contacts, while in different kinds of approaches like in the strong state sort of transfers they use semiconductor properties for the end goal of controlling without relying upon the mobile parts. Relays those have aligned properties and, at times, different working loops are utilized to defend electric circuit frameworks from over-burden flows. In the ongoing day power systems,

these activities are achieved by computerized gadgets where those are called defensive sorts of relays.

Relay modes refer to the operating configurations of relays in electrical systems, determining how they function to control circuits.

Normally Open (NO): The circuit remains open until the relay is activated, allowing current to flow only when triggered.

Normally Closed (NC): The circuit is closed by default, interrupting current flow when the relay is activated.

Latching Relay Mode: Maintains its state (open or closed) even after the activation signal is removed.

Time-Delay Relay Mode: Introduces a delay in opening or closing the circuit after receiving a signal.

Changeover (CO) Mode: Switches between two circuits, redirecting current from one path to another when activated.

3.1.4 BLUETOOTH MODULE

A Bluetooth module is a device that allows wireless communication between electronic devices over short distances. It uses short-range radio frequency to enable devices to communicate without cables or wires.

Wireless communication is swiftly replacing the wired connection when it comes to electronics and communication. Designed to replace cable connections HC-05 uses serial communication to communicate with the electronics. Usually, it is used to connect small devices like mobile phones using a short-range wireless connection to exchange files. It uses the 2.45GHz frequency band. The transfer rate of the data can vary up to 1Mbps and is in range of 10 meters.

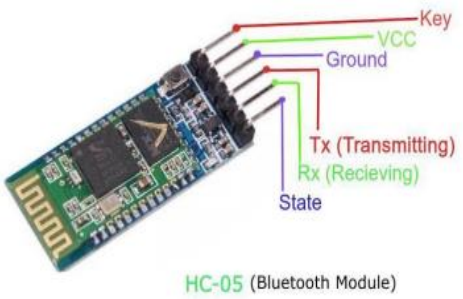

Figure 5: Bluetooth Module HC-05

The HC-05 module can be operated within 4-6V of power supply. It supports baud rate of 9600, 19200, 38400, 57600, etc. Most importantly it can be operated in Master-Slave mode which means it will neither send or receive data from external sources.

Description of HC-05 module

- Enable - This pin is used to set the Data Mode or and AT command mode (set high).
- VCC - This is connected to +5V power supply.
- Ground - Connected to ground of powering system.
- Tx (Transmitter) - This pin transmits the received data Serially.
- Rx (Receiver) - Used for broadcasting data serially over Bluetooth.
- State -Used to check if the Bluetooth is working properly.

The HC-05 Bluetooth Module can be used in two modes of operation: Command Mode and Data Mode.

Command Mode:

In Command Mode, you can communicate with the Bluetooth module through AT Commands for configuring various settings and parameters of the Module like get the firmware information, changing Baud Rate, changing module name, it can be used to set it as master or slave.

A point about HC-05 Module is that it can be configured as Master or Slave in a communication pair. In order to select either of the modes, you need to activate the Command Mode and sent appropriate AT Commands.

Data Mode:

Coming to the Data Mode, in this mode, the module is used for communicating with other Bluetooth device i.e. data transfer happens in this mode.

3.1.5 RASPBERRY PI 4

Figure 6: Raspberry Pi 4 Model

1. Powerful Performance

Quad-core Cortex-A72 CPU (1.5 GHz) with RAM options up to 8GB for high efficiency.

2. Enhanced Connectivity

Supports Gigabit Ethernet, dual-band Wi-Fi, Bluetooth 5.0, and USB 3.0 ports.

3. Dual 4K Displays

Two micro-HDMI ports support dual 4K monitors at 60 fps.

4. Versatile I/O

Includes a 40-pin GPIO header and multiple USB ports for diverse project needs.

5. Wide Applications

Used for coding, IoT, robotics, media centers, and home automation.

The Raspberry Pi 4 is a powerful and versatile single-board computer featuring a quad-core Cortex-A72 64-bit CPU clocked at 1.5 GHz, offering significant performance improvements. It comes in 2GB, 4GB, and 8GB LPDDR4 RAM variants to suit various use cases. Storage is supported via microSD cards, with additional options to boot from USB drives or network storage. Connectivity options include Gigabit Ethernet, dual-band Wi-Fi (2.4 GHz and 5 GHz), and Bluetooth 5.0, ensuring fast and reliable communication. It supports dual 4K resolution displays via two micro-HDMI ports, making it ideal for multimedia applications. For external devices, it provides two USB 3.0 ports for high-speed data transfer and two USB 2.0 ports for additional peripherals. Additionally, its 40-pin GPIO header enables seamless hardware interfacing, making it suitable for projects like IoT, robotics, and home automation.

3.1.6 JUMPER WIRES

Figure 7: Jumper Wires and Types

Jumper wires are essential for creating temporary and flexible electrical connections in electronic circuits. They are used to connect components on breadboards, link sensors or modules to microcontrollers, and test prototypes without soldering. Available in male-to-male, male-to-female, and female-to-female types, they simplify circuit assembly and debugging.

1. Male-to-Male Jumper Wires:

Male-to-male jumper wires have pins on both ends, ideal for connecting components on a breadboard or to microcontrollers. These are commonly used for prototyping and testing circuits. They provide a quick and secure way to establish temporary electrical connections.

2. Male-to-Female Jumper Wires:

Male-to-female jumper wires have a pin on one end and a socket on the other. These are perfect for connecting modules or sensors to microcontrollers, bridging breadboards, or linking pin headers. Their versatility makes them essential for interfacing components.

3. Female-to-Female Jumper Wires:

Female-to-female jumper wires have sockets on both ends, used to connect pin headers, boards, or modules with male connectors. These are commonly utilized in modular circuits where direct connections are required without soldering. They are widely used in Arduino and Raspberry Pi projects.

3.1.7 BREAD BOARD

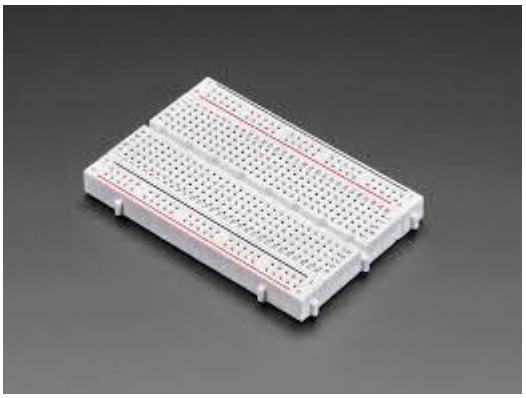

Figure 8: Bread Board

A breadboard is a rectangular board used for prototyping and testing electronic circuits without soldering. It has a grid of holes where electronic components like resistors, capacitors, and ICs can be inserted and connected. The board features metal strips underneath the holes to create electrical connections. It typically includes two long horizontal power rails for positive and negative voltage. The central area has vertical columns for connecting components in series. Breadboards are reusable, making them ideal for learning and experimenting with circuits. They come in various sizes and are a staple in electronics projects

Chapter 4

4.1 Modes of Operation

4.1.1 ZIGBEE

Figure 9: Zigbee Logo

Zigbee is a wireless protocol used by everything from IoT devices such as light bulbs, sockets, plugs, motion sensors and other home automation devices to smart energy, electric vehicle charging and industrial building controls that communicate with each other over a network.

It is designed to use very little power, making it perfect for devices that run on batteries and need to last a long time without needing frequent recharging or battery changes. It uses a mesh network, meaning devices can send data to each other directly or through other devices, which helps to expand the network's reach and make communication more reliable. Zigbee networks can support a large number of devices, up to 65,000, making it suitable for both small and big setups.

Figure 10: Zigbee Network

This also keeps data safe by using AES-128 encryption, which protects information from unauthorized access. It's a cost-effective solution compared to other wireless technologies, and its simple setup and protocol help lower the overall cost of implementation. This makes Zigbee a practical choice for creating large-scale networks with minimal effort and expense.

4.1.2 WI-FI

Figure 11: Wi-Fi

Wi-Fi is a wireless technology that allows devices to connect to the internet using radio waves. It works by sending data between your device and a router through two main frequencies: 2.4 GHz and 5 GHz. Wi-Fi typically uses more power compared to other technologies like Zigbee, making it less ideal for devices that rely on batteries. It offers a wider range, but in crowded areas, interference can reduce its performance. Wi-Fi is great for high-speed tasks like streaming and large data

transfers because it provides higher speeds and more bandwidth.

Wi-Fi supports many devices at once but may slow down if too many are connected to a single router. It has strong security with encryption protocols like WPA3, ensuring data is protected. However, to maintain security, it's important to update the system regularly and use strong passwords. Wi-Fi allows easy connection between devices through wireless access points, and it works well alongside wired networks like Ethernet, making it versatile for different setups. It's widely used in homes, offices, and public spaces for seamless internet access, radio waves. Wi-Fi uses multiple parts of the IEEE 802 protocol family and is designed to work seamlessly with its wired sibling, Ethernet. Compatible devices can network through wireless access points with each other as well as with wired devices and the Internet. Wi-Fi uses radio waves to transmit information between your device and a router via frequencies. Two radio-wave frequencies can be used, depending on the amount of data being sent: 2.4 gigahertz and 5 gigahertz.

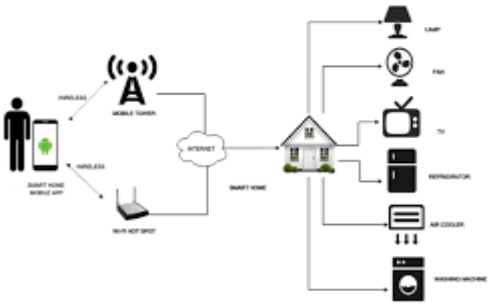

Figure 12: Wi-Fi Communication

4.1.3 BLUETOOTH

Bluetooth is a wireless technology that allows devices to communicate with each other without cables or wires. It uses radio waves in the 2.4 GHz frequency band to share data over a short distance. Bluetooth can be fairly secure, but it depends on how it is configured. For example, many Bluetooth devices use short numeric PINs instead of more secure passwords or passphrases. To connect two Bluetooth devices for the first time, you need to pair them. The process for pairing varies depending on the devices you are connecting. Both devices must support the same profile to connect.

Figure 13: Bluetooth logo

4.2 Voice Assistants

4.2.1 Google Assistant

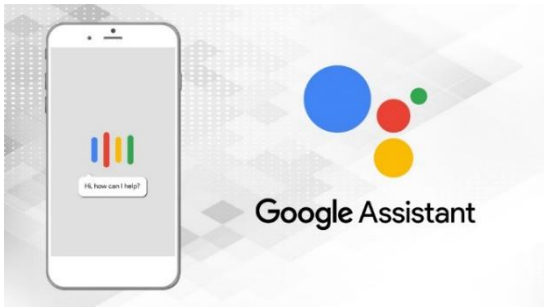

Figure 14: Google Assistant

Google Assistant is a powerful tool for home automation, allowing you to control smart devices with simple voice commands. It works seamlessly with various smart home gadgets, including lights, thermostats, cameras, door locks, and more, making it easy to manage your home environment. By saying commands like "Hey Google, turn off the lights" or "turn on lights", you can control devices hands-free.

The Google Home app enhances its capabilities by letting you group devices, create routines, and manage settings from your smartphone. For example, you can set a "Good Night" routine that turns off lights, locks doors, and adjusts the thermostat with one command. Google Assistant also integrates with platforms like SmartThings and Nest, ensuring compatibility with a wide range of devices. Its multi-user support allows personalized responses, recognizing different voices and tailoring actions based on individual preferences.

Additionally, with its compatibility with popular brands like Philips Hue, Nest, and TP-Link, Google Assistant simplifies creating a fully automated and connected smart home.

4.2.2 Alexa & Amazon

Figure 15: Alexa by Amazon

Alexa is Amazon's voice assistant designed for seamless home automation, enabling control of smart devices like lights, thermostats, cameras, and more through voice commands. It integrates with a wide range of smart home platforms and devices, offering flexibility and ease of use.

Alexa's Smart Home Skill API allows developers to connect and control devices directly, enabling custom skills and advanced automations. With routines and support for IFTTT, Alexa enhances automation by linking devices and apps for personalized, hands-free control of your smart home.

4.2.3 SIRI by Apple

Figure 16: Siri by Apple

Siri, Apple's voice assistant, plays a key role in home automation through its integration with the Apple Home Kit ecosystem. This allows users to control compatible smart devices such as lights, thermostats, and security cameras using simple voice commands like “Hey Siri, turn off the lights.” Siri’s compatibility with Home Kit provides a seamless experience across Apple devices, including iPhone, iPad, and Apple Watch.

In terms of API support, Home Kit offers a framework for developers to create apps and smart devices that work with Siri. By using the Home Kit API, manufacturers can ensure their devices are Siri-compatible, enabling users to control them via voice commands or the Apple Home app. This tight integration ensures a secure and efficient home automation system within the Apple ecosystem.

4.2.4 Samsung Smart Things – Samsung Bixby

SmartThings is a powerful platform for home automation, allowing you to connect and control a wide variety of smart devices like lights, locks, cameras, and thermostats. It enables automation and remote control through the SmartThings app on smartphones and integrates with multiple voice assistants to enhance user experience. SmartThings supports voice commands, making it convenient to control devices hands-free.

Figure 17: Bixby by Samsung

In terms of voice assistants, Samsung Bixby is one of the key assistants that can be used with SmartThings for home automation. Bixby works seamlessly with the SmartThings ecosystem, allowing you to control connected devices through voice commands. For example, you can say, "Hi Bixby, turn off the living room lights". Additionally, SmartThings integrates with other popular voice assistants like Amazon Alexa and Google Assistant, giving you flexibility in choosing the voice control system that works best for your smart home.

4.3 Connecting Software that can be used:

4.3.1 IFTTT

If This Then That (IFTTT) is defined as a web-based automation platform that enables users to connect different web applications and services to automate tasks and create new functionality. It helps create simple, conditional statements known as applets, which changes in other applications or services can trigger.

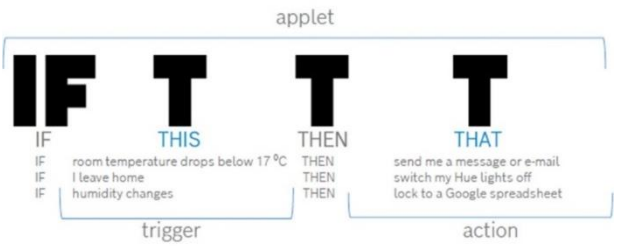

Figure 18: IFTTT

We call every connection we made as applet. Very easy to create Applets and to connect many devices, but requires a subscription for creating more applets.

4.3.2 BLYNK

Blynk is an Internet of Things (IoT) platform that allows you to create mobile apps for controlling and monitoring hardware projects remotely. It provides an easy-to-use interface for connecting devices to the cloud and controlling them via a smartphone.

Figure 19: Blynk Logo

To create widgets in Blynk:

1. Create a Project: Start by creating a new project in the Blynk app and select the hardware you're using (e.g., Arduino, ESP32).

Figure 20: Blynk Web interface

2. Add Widgets: Tap on the "+" icon to add various widgets like buttons, sliders, or displays that correspond to the functions you want to control.

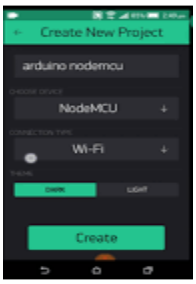

Figure 21: Blynk Mobile Interface

3. Configure Widgets: Each widget is assigned a virtual pin on your device, and you can customize its behavior (e.g., setting ranges, labels, or actions).

4.Connect Hardware: Use Blynk's provided code to upload to your hardware, which will communicate with the app via the Blynk cloud, allowing you to control your devices from the phone.

5. Test and Control: Once set up, you can interact with your hardware in real-time through the app's interface. Hola, you created a new one.

You can also get API's based on location, and can control on your own. API's play important role when we are using any webhooks. Additionally, we can also use mobile application for creation and execution of widgets with minimal code.

4.3.3 GOOGLE HOME

Google Home is a smart speaker and hub powered by Google Assistant, designed to help users control smart devices, play music, set reminders, and access information via voice commands. It integrates with a wide range of smart home devices, such as lights, thermostats, and cameras, allowing users to manage their home automation through voice control or the Google Home app. Google Home can also support multi-room audio, answer questions, provide weather updates, and control devices within the Google ecosystem, including Chromecast and Nest products. It's an easy and hands-free way to interact with your connected home.

Figure 22: Google Home

4.3.4 Arduino Bluetooth Controller App

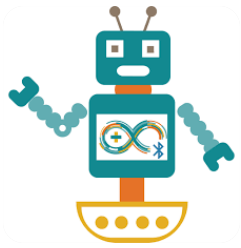

Figure 23: Arduino Controller

The Arduino Bluetooth Controller App is a mobile application that allows you to control Arduino-based projects remotely via Bluetooth. It connects your smartphone or tablet to an Arduino board (typically through a Bluetooth module like HC-05 or HC-06). With the app, you can create custom interfaces with buttons, sliders, and switches to control various components like motors, LEDs, and sensors in real time. The app is highly customizable, enabling users to design their own layouts for specific project needs, making it a popular tool for DIY electronics and home automation projects using Arduino.

There are many other apps in which they can be integrated in the home automation for voice control like Microsoft Cortona etc.

Chapter 5

5.1 Implementation of the project

5.1.1 Introduction

In this project we can control electrical appliances like bulbs. These appliances are been connected to the relay board, this relay board is connected to the microcontroller and the microcontroller acts as a brain of this system. Node MCU Esp8266 version of the microcontroller has been used in the project and the microcontroller is used to connect to a Wi-Fi channel. Using the internet, Node-MCU can communicate with Blynk server (Bluetooth module). The user data are sent to the Blynk server and these data are then sent to the Node-MCU board. A relay takes 5v as input and as the signal. Node MCU can provide only 3.3v supply. To compensate that we can use Boosters or instead we used the serial communication with the Arduino UNO.

The voice command works by the following methods: The respected voice commands are sent to IFTTT server and then the IFTTT server starts to communicate with the Blynk server depending on the kind of command given to it. The Blynk server send's the data to the microcontroller to switch "ON" the respective relay and correspondingly for switching "OFF". When the internet is disconnected then the system goes to offline mode, here the Bluetooth module is used as a data receives data using app so that we can control it.

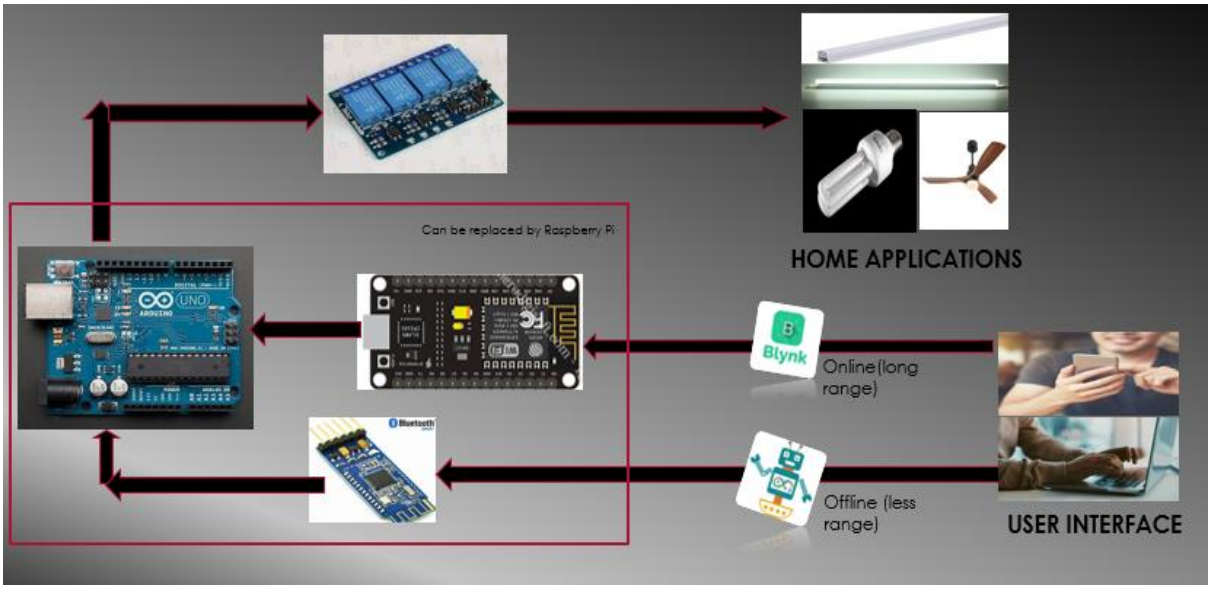

Figure 24: Complete Diagram of the Project

5.1.2 Description

For the above operations to succeed we need to follow the below steps.

1. Create widget using Blynk for the appliance we need. Get the API from Blynk.
2. Connect it to IFTTT software by creating an applet to create a link with respective Voice Assistant in my case Google Assistant.
3. Now create the voice commands in Arduino Bluetooth Controller.
4. Make a Python Interface to control inevitably on your own.
5. Now connect as per the connections required. At last connect relay to Appliances.
6. Upload codes in both Arduino UNO and Node MCU. We can replace with Raspberry Pi since it has built in Bluetooth and Wi-Fi options making it versatile.

5.1.3 Methodology & Implemented diagram

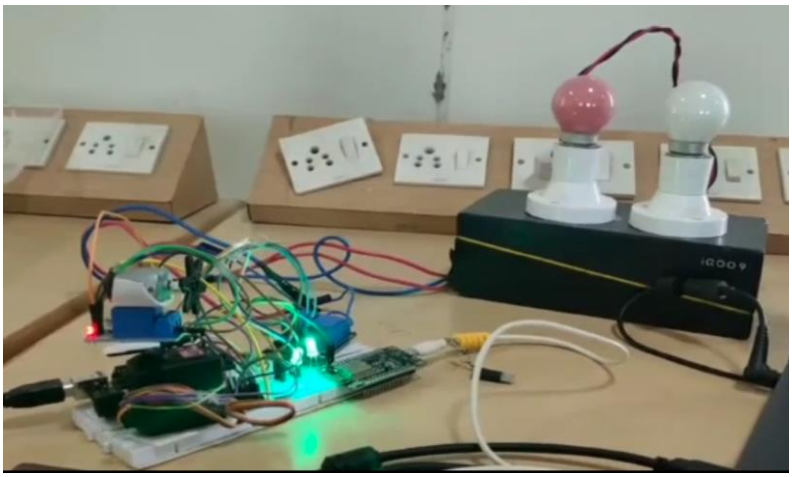

Figure 25: Practical Setup made by us

When the relay is powered by receiving a signal from the microcontroller, the relay input pin contact to the other pin which closes the circuit and thus switch “ON” the appliances. The four appliance that have been connected consist of two supply pins phase and neutral one of the two pins are connected to the appliances directly and the other supply is connected to the appliances through these relays so once the relay is powered on the circuit then the circuit gets closed and thus the appliances get powered.

Uploaded Codes (For Node MCU & Arduino)

```
#define BLYNK_TEMPLATE_ID "TMPL74T8C6Ac"
#define BLYNK_TEMPLATE_NAME "Quickstart Template"
#define BLYNK_AUTH_TOKEN "__VkcgYtNzUaEwNH7DJAusyudefDZ9aK"

#include <ESP8266WiFi.h>
#include <BlynkSimpleEsp8266.h>

#include <FS.h>          // this needs to be first, or it all crashes and burns...
#include <WiFiManager.h>

#include <SoftwareSerial.h>
SoftwareSerial abc(D1, D2);

BLYNK_WRITE(V0)
{
  int p = param.asInt();
  if (p == 1)
  {
    abc.println("1");
  }
  if (p == 0)
  {
    abc.println("2");
  }
}
BLYNK_WRITE(V1)
{
  int p = param.asInt();
  if (p == 1)
  {
    abc.println("3");
  }
  if (p == 0)
  {
    abc.println("4");
  }
}
BLYNK_WRITE(V2)
{
  int p = param.asInt();
  if (p == 1)
  {
    abc.println("5");
  }
  if (p == 0)
  {
    abc.println("6");
  }
```

```
}
BLYNK_WRITE(V3)
{
  int p = param.asInt();
  if (p == 0)
  {
    abc.println("7");
  }
  if (p == 1)
  {
    abc.println("8");
  }
  if (p == 2)
  {
    abc.println("9");
  }
  if (p == 3)
  {
    abc.println("10");
  }
  if (p == 4)
  {
    abc.println("11");
  }
  if (p == 5)
  {
    abc.println("12");
  }
  if (p == 6)
  {
    abc.println("13");
  }
  if (p == 7)
  {
    abc.println("14");
  }
  if (p == 8)
  {
    abc.println("15");
  }
  if (p == 9)
  {
    abc.println("16");
  }

}
void setup()
{
  Serial.begin(115200);
  abc.begin(9600);
```

```
  Serial.println();
  WiFiManager wifiManager;
  wifiManager.setBreakAfterConfig(true);
  if (!wifiManager.autoConnect("AutoConnectAP", "password")) {
    Serial.println("failed to connect, we should reset as see if it connects");
    delay(3000);
    ESP.restart();
    delay(5000);
  }
  Serial.println("connected...yeey :)");
  Serial.println("local ip");
  Serial.println(WiFi.localIP());
  const char* ssid = WiFi.SSID().c_str();
  const char* pass = WiFi.psk().c_str();
  Blynk.begin(BLYNK_AUTH_TOKEN, ssid, pass);
}
void loop()
{
  Blynk.run();
}
```

For Arduino UNO

```
#include <SoftwareSerial.h>
int led1=7;
int led2=8;
int fan=9;
void setup() {
  Serial.begin(9600);
  pinMode(led1,OUTPUT);
  pinMode(led2,OUTPUT);
  pinMode(fan,OUTPUT);
  servoMotor.attach(servoPin);
}
void loop() {
  while(Serial.available()>0)
  {
    int a=Serial.parseInt();
    Serial.println(a);
    if(a==1)
    {
      digitalWrite(led1,HIGH);
    }
    if(a==2)
    {
      digitalWrite(led1,LOW);
    }
    if(a==3)
    {
      digitalWrite(led2,HIGH);
```

```
    }
    if(a==4)
    {
      digitalWrite(led2,LOW);
    }
    if(a==5)
    {
      digitalWrite(fan,HIGH);
    }
    if(a==6)
    {
      digitalWrite(fan,LOW);
    }
    Serial.print("\n");
  }
}
```

Here the above codes are written for controlling any 3 appliances assuming first 2 are lights and last one is a Fan.
We need to connect the relay module inputs to Arduino's Digital pins 7,8,9 using jumper wires.

Future Scope

The future of home automation is expected to be characterized by the integration of increasingly sophisticated technology and the expansion of the Internet of Things (IoT).

One area where we can expect to see significant advancements is in the field of artificial intelligence (AI) and machine learning (ML). These technologies will enable home automation systems to become more intelligent and adaptable, allowing them to learn and respond to the preferences and behaviors of homeowners. For example, smart home systems will be able to automatically adjust lighting, temperature, and other settings based on a person's schedule and habits, without the need for manual adjustments.

Another area where we can expect to see growth is the integration of virtual and augmented reality (VR/AR) technology also IOT. This will allow homeowners to interact with their smart home systems in new and innovative ways, such as using voice commands or gestures to control appliances and devices, or using VR/AR technology to remotely monitor and control their home from a different location.

In addition, the future of home automation also includes more advanced security features such as facial recognition, biometric authentication, and real-time monitoring. This will provide homeowners with more secure and personalized control over their home.

Overall, the future of home automation looks to be one of increased convenience, efficiency, and personalization, as technology continues to advance and become more integrated into our home

Conclusion

This project is developed to make a smart home automation system using Voice control by utilizing various assistants, Bluetooth module. Their main requirements are: a system that could be operated using by an app, voice control to operate the appliances from anywhere. The differently-abled, old peoples will be the most beneficiary of this system as they can operate the appliances independently. The system requires a Wi-Fi or an internet connection to function and in the absence of internet connection, Bluetooth connection is been used to function the operation efficiently. So, we proposed this system which to be highly energy saving and reliable and make people feel more comfortable and satisfied. Now everyone can utilize this technology to operate the appliances. The home automation system has been experimentally proven to work satisfied by connecting sample appliances to it and the application were successfully controlled from a wireless mobile device. We learned many skills such as soldering wiring the circuit and other tools that we use for this project and was able to work together as a team during this project. The Bluetooth client was successfully tested on a multitude of different mobile phones from different manufacturers, thus proving its portability and wide compatibly. Thus, a low- cost home automation system was successfully designed. Implement and tested.

Day by day, the field of automation is blooming and these systems are having great impact on human beings. The project which is to be implemented is a home automation using Easy IOT Webserver and WIFI and has very good future development. In the current system webserver is installed on a windows PC so the home appliances can be controlled using only by using the device on which webserver is installed. This can be further developed installing webserver on cloud. Advantage of installing webserver on the cloud is that home can be controlled by using any device which has an internet connection and a web browser

References

Webpage Links:

1. Geeks for Geeks (About Components description)
2. Wikipedia (For General information and about controllers)
3. TechTarget (About Modes of operation)
4. Arduino Official Website (Offers detailed guides, tutorials, and community support for Arduino-based projects.)
5. SmartThings Support and Blog (Provides information on setting up and using SmartThings for home automation.)
6. Blynk IoT Platform (Features tutorials, documentation, and resources for using Blynk in IoT and home automation projects.)

Books Referred:

1. "Internet of Things: A Hands-On Approach" by Arshdeep Bahga and Vijay Madisetti.
2. "Programming Arduino: Getting Started with Sketches" by Simon Monk
3. "Home Automation Made Easy: DIY Project Using Arduino, Android, and Your Smartphone" by Cameron Coward

Conference Papers from IEEE:

1. Voice Controlled Smart Home Automation System Using Bluetooth Technology (By Md. Sajjad Hossain Shawon and members)
2. Voice Controlled Home Automation System (By Ribil Mary Roy and members)
3. Voice Recognized Home automation system for physically challenged people (By T Arun Prasanth and members)

Acknowledgements

We wish to record a deep sense of gratitude to our project guide Dr. Shaik Riyaz Hussain, Professor of RGUKT, IIITN, for providing us his time, knowledge and constant support at all stages during the building and completion of this project.